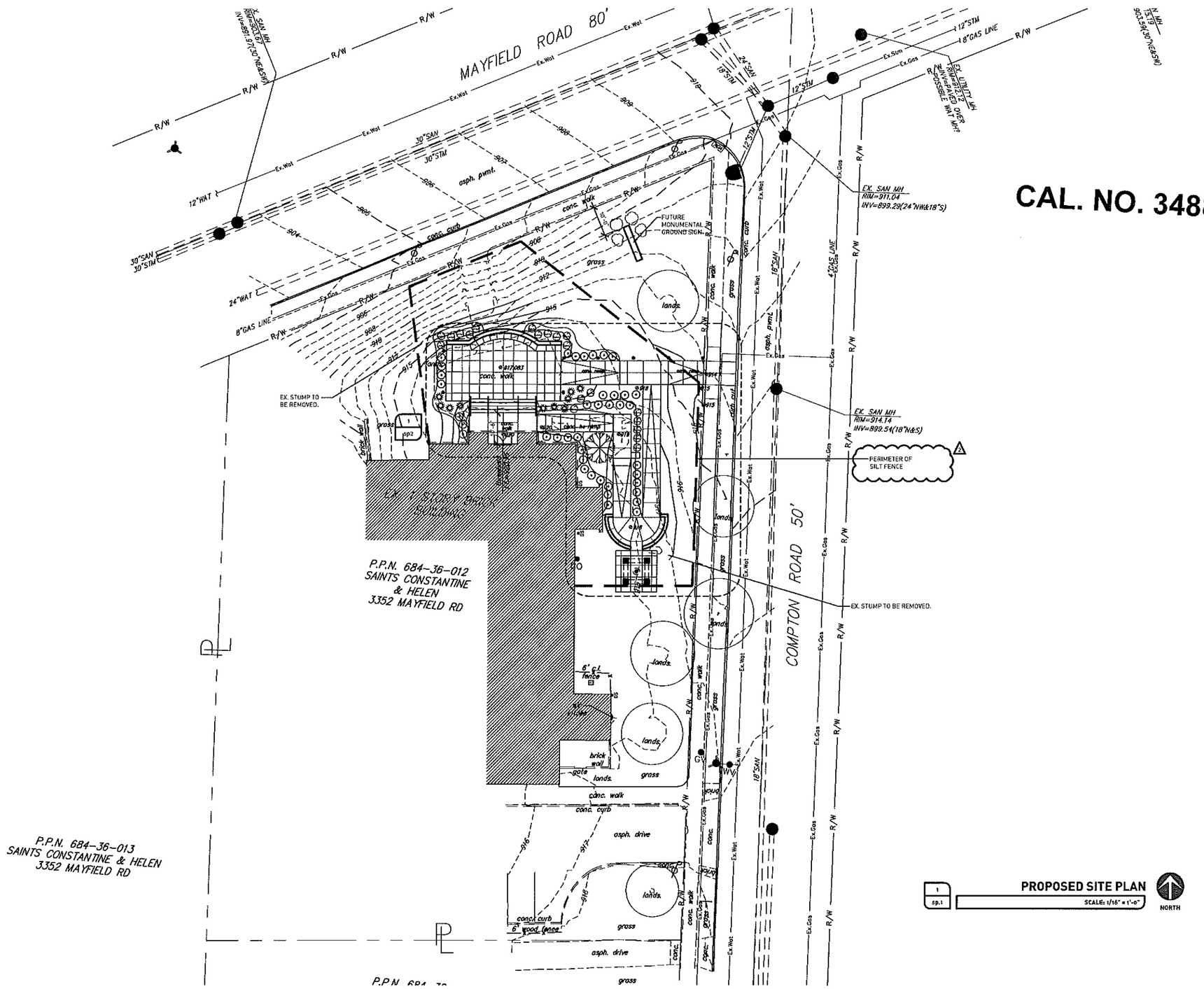

CAL. NO. 3488

PROPOSED SITE PLAN

SCALE: 1/16" = 1'-0"

NORTH

ADDK, INC. • [IA :: 17236 Madison Avenue, Lakewood, OH 44107] • [P :: 216.771.1920] • [F :: 216.771.1797] • [W :: www.addkinc.com]

DAVID L. KREBS 11550 REGISTERED ARCHITECT

DAVID KREBS :: LICENSE NO. :: 11550
EXPIRATION DATE :: 12.31.2019

ARCHITECTURE OFFICE :: DAVID KREBS

PROJECT TITLE:

EXTERIOR WALKS/RAMPS FOR:
STS CONSTANTINE AND HELEN CATHEDRAL

SIMMONS BROTHERS CORPORATION CONSTRUCTION

PROJECT:

STS CONSTANTINE AND HELEN CATHEDRAL
3352 MAYFIELD ROAD
CLEVELAND, OH 44118

PERMIT	03.04.2019
PERMIT REVISION	03.05.2019
REVISIONS	03.29.2019
REVISIONS	04.02.2019

ISSUE/DATE:

THESE DRAWINGS, DESIGN, CONCEPT AND INFORMATION ARE THE EXCLUSIVE PROPERTY OF ADDK, INC. THEY ARE FOR CONSTRUCTION ONLY AT THE SITE INDICATED. UNAUTHORIZED USE, ALTERATION OR REPRODUCTION OF THE DOCUMENTS AND DESIGN IS PROHIBITED WITHOUT WRITTEN PERMISSION FROM ADDK, INC.

AUTHORIZATION:

JOB NO.: 18.30

SHEET TITLE:

SHEET NO.: sp.1

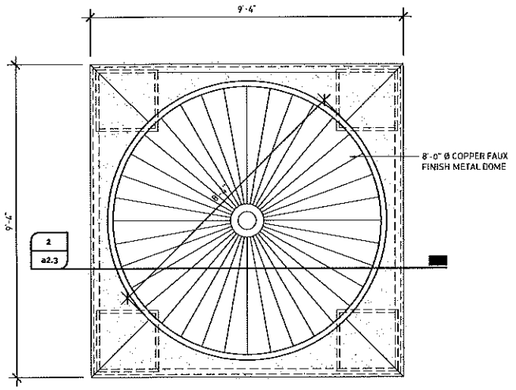

BELL TOWER ROOF PLAN

7 / a2.2 — SCALE: 1/2" = 1'-0"

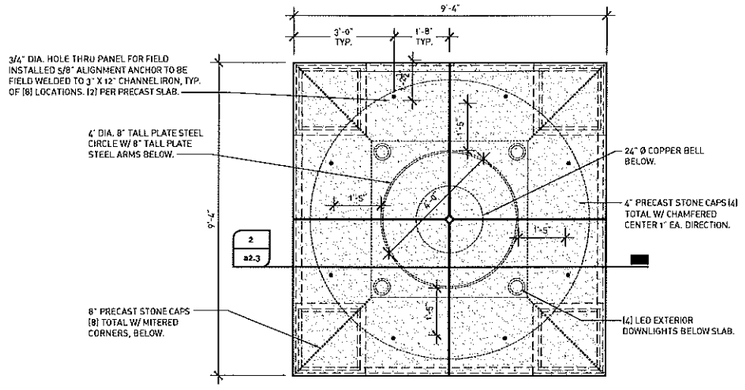

BELL TOWER 4" PRECAST SLAB PLAN

6 / a2.2 — SCALE: 1/2" = 1'-0"

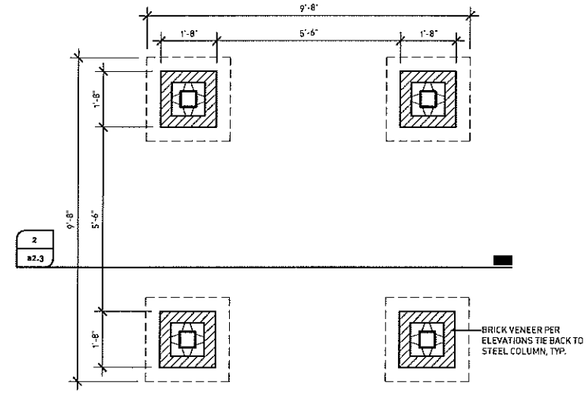

BELL TOWER BRICK LEVEL PLAN

3 / a2.2 — SCALE: 1/2" = 1'-0"

NOTE:
PRECAST DESIGN TO INCLUDE HOLES AS INDICATED FOR FIELD APPLIED EPOXY FASTENERS/CONNECTIONS FOR COMPONENTS TO BE SECURED BACK TO STRUCTURE. ALL COMPONENTS TO INCLUDE INSTALLATION LIFTING BAILS (LOOPS/HOOKS/PLATES/ETC.) TO BE REMOVED IN FIELD AFTER INSTALLATION.

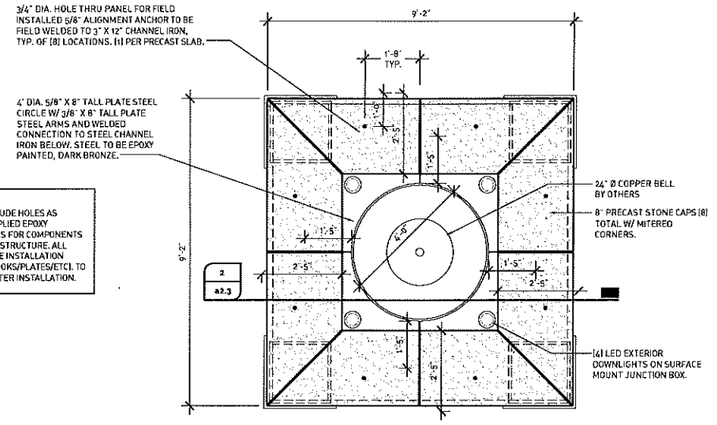

BELL TOWER 8" PRECAST SLAB PLAN

5 / a2.2 — SCALE: 1/2" = 1'-0"

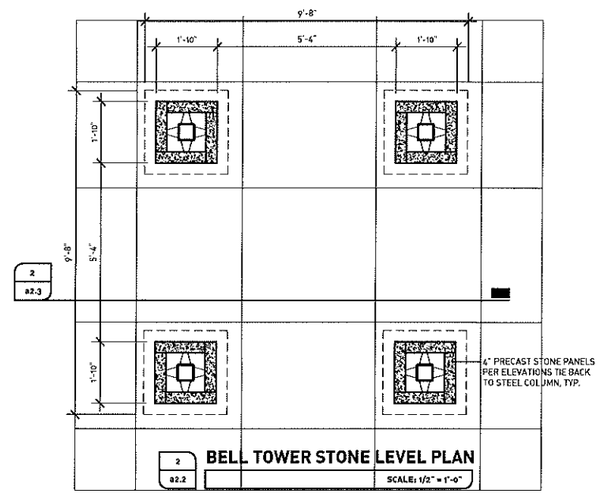

BELL TOWER STONE LEVEL PLAN

2 / a2.2 — SCALE: 1/2" = 1'-0"

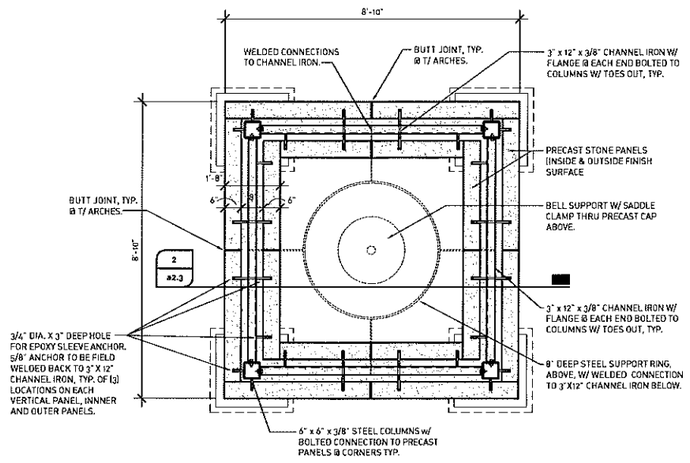

BELL TOWER PRECAST LEVEL PLAN

4 / a2.2 — SCALE: 1/2" = 1'-0"

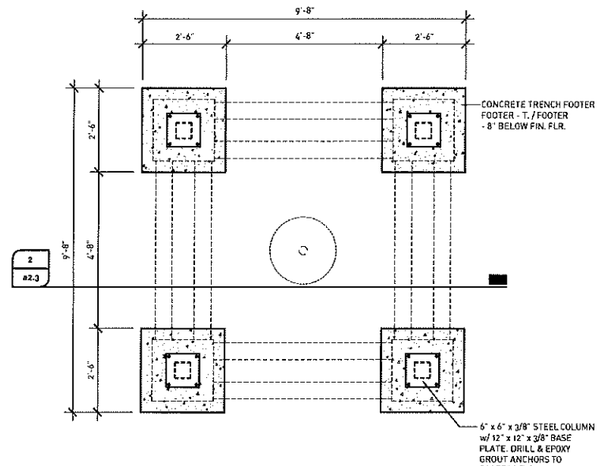

BELL TOWER FOUNDATION PLAN

1 / a2.2 — SCALE: 1/2" = 1'-0"

a°dk

ADDK, INC. • (DA in Greek Heathen Arrows, Lakewood, OH 44107 • t P = 216.771.1700 • F = 216.771.1701 • EM = www.addkinc.com)

ARCHITECTURE OFFICE = DAVID KREBS

DAVID L KREBS — STATE OF OHIO — REGISTERED ARCHITECT — 14550

DAVID KREBS = LICENSE NO. = 14550
EXPIRATION DATE = 12.31.2019

EXTERIOR WALKS/RAMPS FOR: STS CONSTANTINE AND HELEN CATHEDRAL

Simmons Brothers Construction Co. — Commercial & Industrial Construction — SBC

PROJECT TITLE:

PROJECT:
STS CONSTANTINE AND HELEN CATHEDRAL
3353 MAYFIELD ROAD
CLEVELAND, OH 44118

ISSUED AT:

PERMIT	02.04.2019
PERMIT REVISION	03.05.2019
REVISIONS	03.29.2019
REVISIONS	06.02.2019
REVISIONS	06.18.2019
REVISED RAMP/RAILINGS	07.03.2019
REVISED BELL TOWER	07.11.2019

AUTHORIZATION:

THESE DRAWINGS, DESIGN, CONCEPT AND INFORMATION ARE THE EXCLUSIVE PROPERTY OF ADDK, INC. THEY ARE FOR CONSTRUCTION ONLY AT THE SITE INDICATED. UNAUTHORIZED USE, ALTERATION OR REPRODUCTION OF THE DOCUMENTS AND DESIGN IS PROHIBITED WITHOUT WRITTEN PERMISSION FROM ADDK, INC.

JOB No.: 18.30

SHEET TITLE:

SHEET No.: **a2.2**

NOTE:
PRECAST DESIGN TO INCLUDE HOLES AS INDICATED FOR FIELD APPLIED EPOXY FASTENERS/CONNECTIONS FOR COMPONENTS TO BE SECURED BACK TO STRUCTURE. ALL COMPONENTS TO INCLUDE INSTALLATION LIFTING BAILS (LOOPS/HOOKS/PLATES/ETC.) TO BE REMOVED IN FIELD AFTER INSTALLATION.

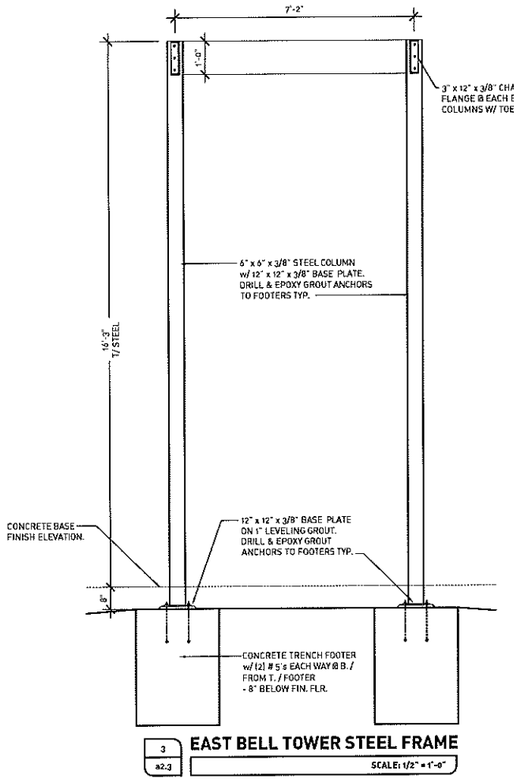

3 a2.3 **EAST BELL TOWER STEEL FRAME**

SCALE: 1/2" = 1'-0"

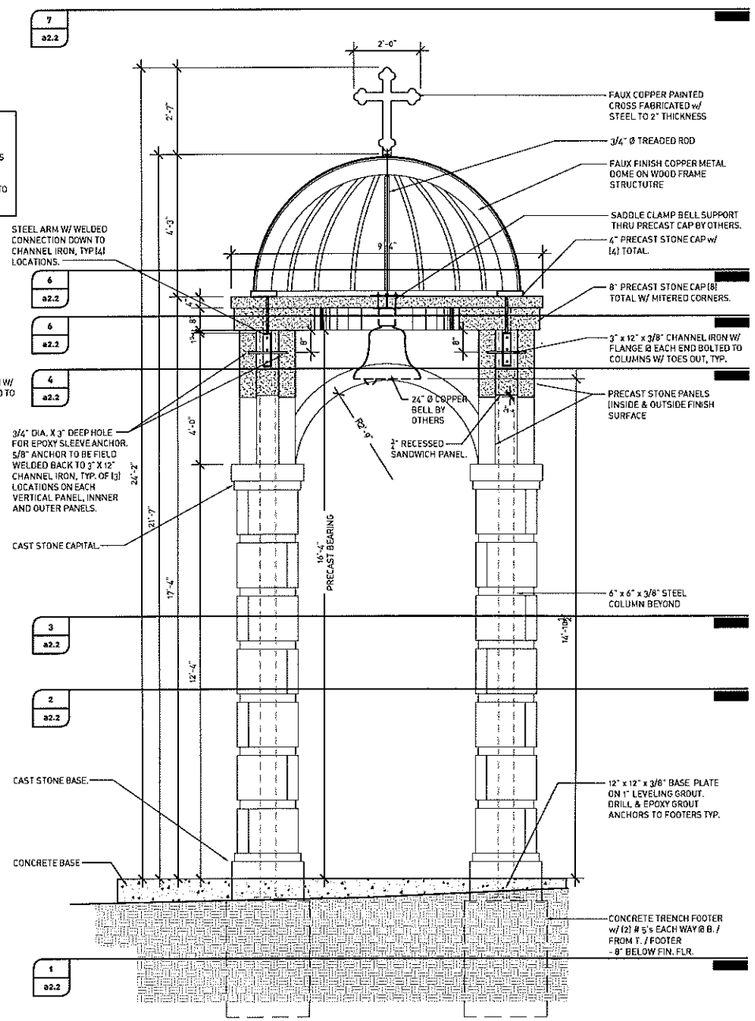

2 a2.3 **EAST BELL TOWER SECTION**

SCALE: 1/2" = 1'-0"

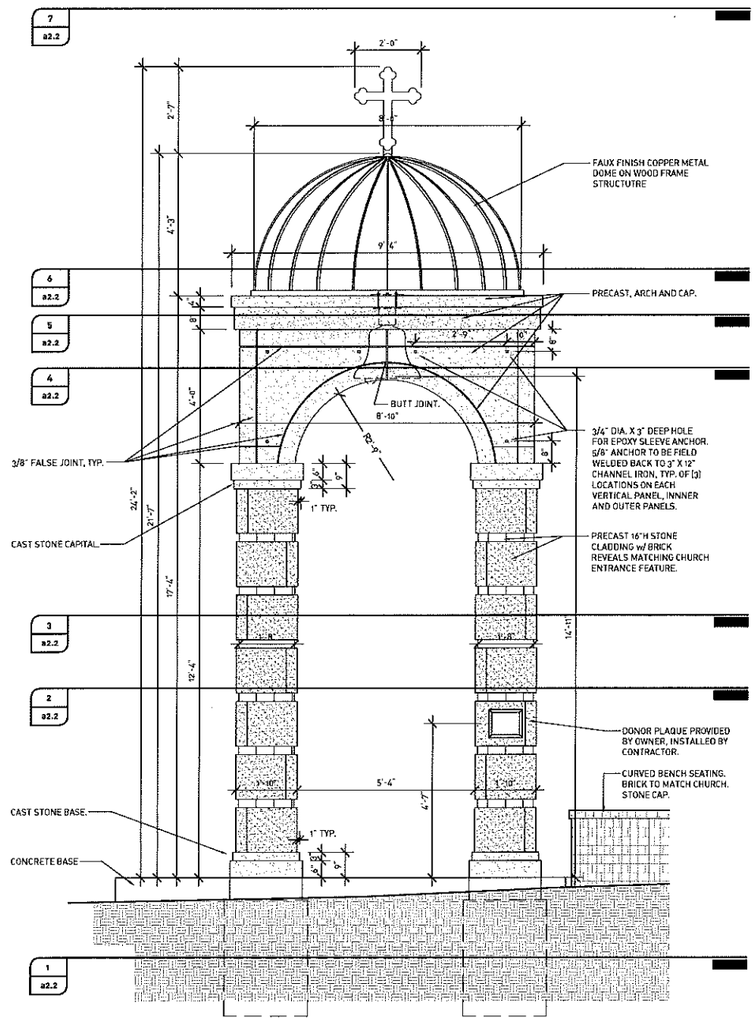

1 a2.3 **EAST BELL TOWER ELEVATION**

SCALE: 1/2" = 1'-0"

a°dk

ADDK, INC. ▪ 1264 Hadden Avenue, Lakewood, OH 44107 ▪ P: 216.771.1021 ▪ F: 216.771.0991 ▪ URL: www.addkinc.com

ARCHITECTURE OFFICE OF: DAVID KREBS

DAVID KREBS OF LICENSE NO. IS 11559
EXPIRATION DATE IS 12.31.2019

PROJECT TITLE:

EXTERIOR WALKS/RAMPS FOR: STS CONSTANTINE AND HELEN CATHEDRAL

SIMMONS BROTHERS CORPORATION
CONSTRUCTION MANAGEMENT & GENERAL CONSTRUCTION

PROJECT:

STS CONSTANTINE AND HELEN CATHEDRAL
3357 MAYFIELD ROAD
CLEVELAND, OH 44118

ISSUED/DATE:

PERMIT	03.04.2019
PERMIT REVISION	03.05.2019
REVISIONS	03.29.2019
REVISIONS	04.02.2019
REVISIONS	04.18.2019
REVISED RAMP RAILINGS	07.03.2019
REVISED BELL TOWER	07.11.2019

AUTHORIZATION:

THESE DRAWINGS, DESIGN, CONCEPT AND INFORMATION ARE THE EXCLUSIVE PROPERTY OF ADDK, INC. THEY ARE FOR CONSTRUCTION ONLY AT THE SITE INDICATED. UNAUTHORIZED USE, ALTERATION OR REPRODUCTION OF THE DOCUMENTS AND DESIGN IS PROHIBITED WITHOUT WRITTEN PERMISSION FROM ADDK, INC.

JOB NO.: 18.30

SHEET TITLE:

SHEET NO.:

a2.3